EZX Blast Wheel

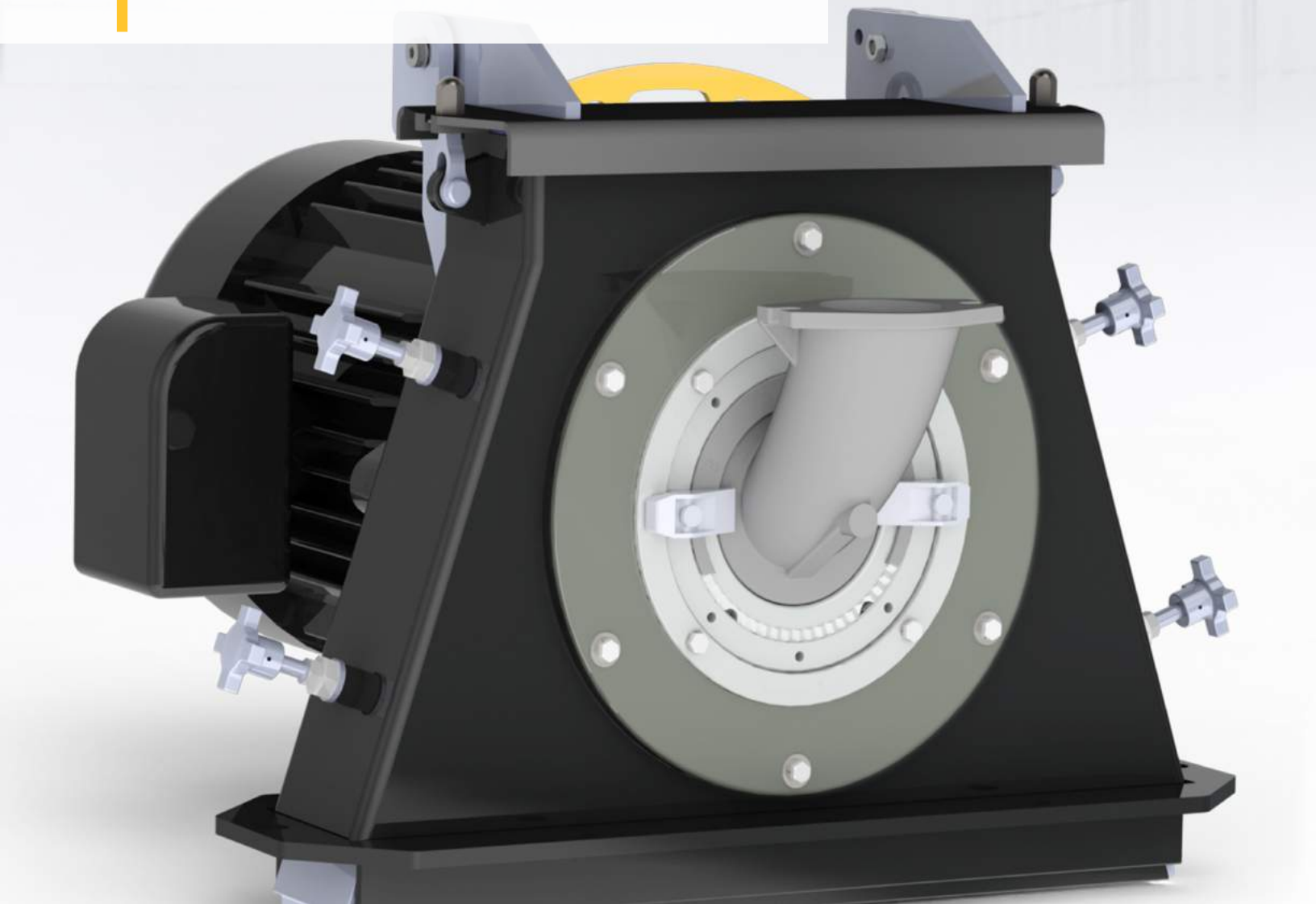

Next generation blast wheel for optimal performance.
Extra wear life. Extra time saved. Extra Profitability.

wheelabrator
A Norican Technology

www.wheelabratorgroup.com

EZX Blast Wheel

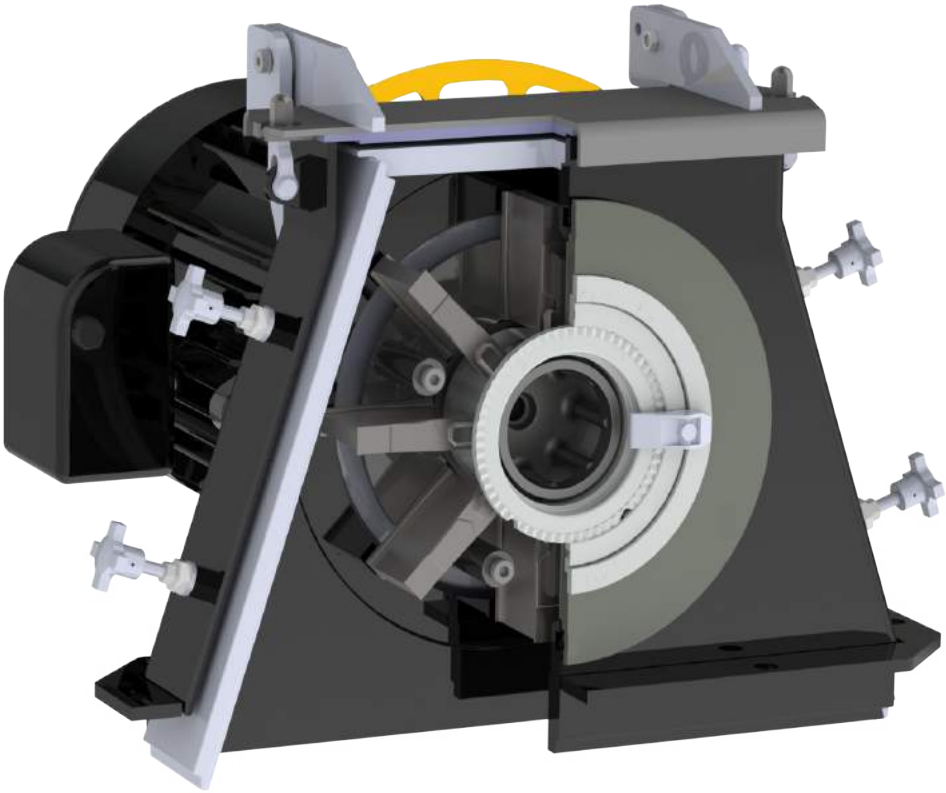

Increase productivity, save costs, and solve complex production challenges.

The Wheelabrator EZX Blast Wheel is uniquely built for heavy-duty applications and has been designed using the latest advances in blast wheel technology to help foundries boost production while saving time and costs.

EZX is the easiest and most cost-effective wheel to maintain in the industry with the quality and high performance you've come to expect from Wheelabrator.

Re-engineered to solve your most complex production challenges, EZX includes a variety of next generation enhancements for optimal performance:

- Thicker, redesigned blades for easy, time saving assembly and longer wear life
- Newly designed impeller reduces abrasive consumption
- Double-sided bare wheel reduces time lost in maintenance
- Precision machined hub seal ensures proper alignment, longer motor life, and reduced wear

Optimize your existing equipment for extra wear life, extra time saved, and extra profitability with the Wheelabrator EZX Blast Wheel.

EZX can be used for a variety of applications including:

- Tumblast equipment
- Table machines
- Hanger type machines
- Horizontal belt machines
- Plate machines
- Wire mesh belt machines

wheelabrator
A Norican Technology

Special Features and Options

Control cage with impeller

35EZX160 Blade

Bare Wheel

The new EZX Wheel design can reduce maintenance time and costs. EZX units use a direct drive motor to deliver the following benefits:

- Higher abrasive velocities allow you to use a smaller sized abrasive to significantly reduce wear
- Precise balancing and machining processes produce extremely long life wear parts (including heavy duty motor, bearings and other cast parts)
- Blade set weight tolerances within 3 grams
- Vibration and abrasive consumption are reduced by the exacting impeller casting process, which is concentric on 3 axes
- Motor failures caused by abrasive intrusion are eliminated by the effective, integrated, frictionless hub seal
- Hinged lid and safety swing nuts prevent the time-consuming full removal of the cap nut and washer
- Shot locking is greatly reduced thanks to the integrated Acme threads

EZX 3.5" Double-sided Bare Wheel

- Helps center abrasive on blade
- Dynamically balanced using internal weights
- Machined for precision mating surface

35EZX160 Blade

- Self securing full dual taper fit for easy removal of blade
- Centrifugal lock up – no additional fasteners required
- 1/8" thicker than traditional EZEFIT® Blades
- Locfit feature enables easy installation of blades ensuring time-saving and efficient assembly, eliminating the need for NuckleSaver™
- Improved metallurgy for lower operating costs

Liner Package

- Only 9 total liners and only 5 part numbers needed for assembly
- Front face plate liner eliminated by using double-sided bare wheel

Impeller

- All three critical diameters made on one side of shell pattern to deliver concentricity
- Critical axial and radial surfaces machined to ensure correct alignment

Control Cage

- Outer Diameter and back face are machined for proper seating and centering of parts
- Abrasive channel developed to optimize clearance between parts for abrasive flow
- Available in 30, 49, 70, 100 degree openings for control of hot spot length

Hub Seal

- Precision machined for proper alignment not "as cast"
- Creates a complete, low friction seal
- Keeps any abrasive from exiting between the housing and motor interface

*NuckleSaver is a registered trademark of Wheelabrator Group, Inc.

Canada
Wheelabrator Group (Canada) Ltd.
4900 Palladium Way Suite 200
Burlington, ON L7M 0W7

T: +1 (800) 845 8508
T: +1 (905) 319 7930
F: +1 (905) 319 7561
E: info@wheelabratorgroup.com

Mexico
WG Plus Mexico S. De R.L. de C.V.
Rectángulos No. 214,
Parque Industrial Arco Vial
Garcia N.L. CP 66001

T: +52 81 1946 1000
F: +52 81 8385 5734
E: servicioaclientes@wheelabratorgroup.com

USA
Wheelabrator Group
1606 Executive Drive
LaGrange, GA 30240

T: +1 (800) 544 4144
T: +1 (706) 884 6884
F: +1 (706) 884 0568
E: info@wheelabratorgroup.com

wheelabrator
A Norican Technology

We are Norican: DISA | Italpresse Gauss | StrikoWestofen | Wheelabrator
www.noricangroup.com